Models LP/HP-A4K & LP/HP-A445K
Air Quality Test Kits

Manual No. AIRTST01
(Rev 6 July 2007)

Operating Manual

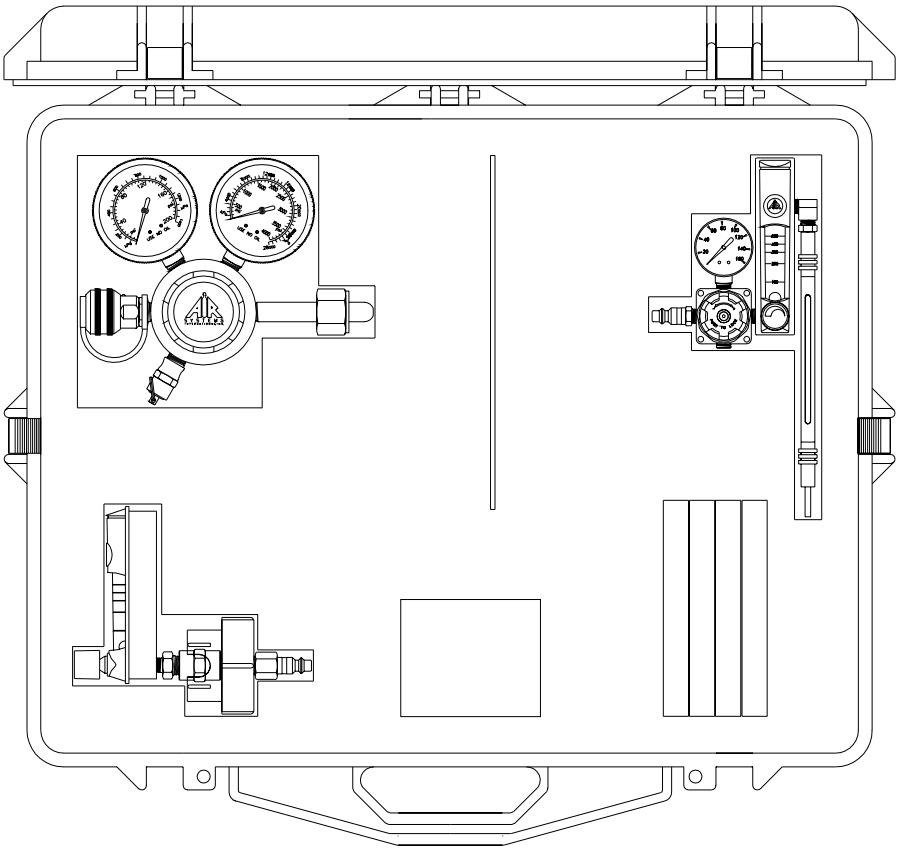

AIR SYSTEMS INTERNATIONAL, INC.
829 Juniper Crescent, Chesapeake, Va., 23320
Telephone (757) 424-3967
Toll Free 1-800-866-8100
Fax No. (757) 424-5348
http://www.airsystems.com
e-mail: sales@airsystems.com

Air Systems International, Inc.
Registered to ISO 9001
Certificate No. A5033

Printed in U.S.A

OVERVIEW

Air Systems' breathing air quality test kits are designed to test the air produced by compressors (Model LP-A4) and compressed air in cylinders (Model HP-A4 and HP-A445). These tests are accomplished through the use of low cost detector tubes that provide a "go/no go" test of the air quality. If a high reading is found, this signals the user that they have a potentially unacceptable quality of breathing air. If this occurs, a laboratory analysis of the air components must be made to determine the exact readings of the air quality and take corrective action. For precision laboratory analysis, contact Air Systems' customer service department, 1-800-866-8100.

Federal OSHA requires that Grade-D air be supplied to the respirator user. OSHA's air quality standards are found in Section 29CFR 1910.134(*i*) in the Code of Federal Regulations. OSHA's standards are taken from the Compressed Gas Association (CGA) Commodity Specification G-7.1-1989. CGA's standard for Grade-D air is as follows:

Carbon dioxide:	1000ppm maximum
Carbon monoxide:	10ppm maximum
Oil mist:	5.0 mg/m^3 (condensed hydrocarbons)
Water vapor:	30-80 mg/m^3 (Cylinder air only)

Our test kits use the above test tubes as standard, other test tubes are available for specific tests of suspected contaminants. Call us for your specific applications.

Oxygen tests are available from our low cost oxygen test meter, Model AQT-02, - consult factory for details.

LOW PRESSURE AIR TESTS- MAXIMUM 125PSI PROCEDURE FOR MODEL LP-A4

Model LP-A4 is supplied with a regulator/flowmeter that must be connected after the compressor's Grade-D filtration system. The male quick connect plug on the regulator can be coupled directly into the air distribution manifold of the filtration system. Our tests will determine acceptable air quality and whether the filter system is functioning properly. The following steps should be followed:

1. Attach regulator assembly to female coupling on air distribution manifold. The flowmeter should be in the vertical position for maximum accuracy.

2. Turn regulator knob clockwise and set pressure gauge between 20 - 30psi. Turn the flowmeter valve momentarily to assure the flowmeter ball moves freely. Shut off flowmeter valve (turn counterclockwise to open, clockwise to close).

Note: Do not overtighten flowmeter needle valve. The recommended tube testing sequence is as follows: water vapor, carbon dioxide, carbon monoxide, and oil mist.

3. Break the ends off a fresh test tube using the small metal breaker sleeve in the kit. Install tube in the rubber tube holder with the directional arrow found on the tube pointing down.

Install test tube by first inserting the upper end into the holder then stretching the holder over the lower end of the tube.

Warning: Avoid cuts from the broken glass ends of the test tube, **see page 6.**

The rubber tube holder is then inserted into the hose barb arrow pointing down, located at the top of the flowmeter. The flowmeter is now adjusted to the proper flow rate per the chart below and the required time. Start the test with the water tube and work through the chart.

Tube	Contaminant	Flow Rate Setting	Test Time in Minutes
6A	Water Vapor	100	10
2A	Carbon Dioxide	100	05
1A	Carbon Monoxide	100	03
109AD	Oil Mist	500	30

Note: Read the flow rate at the center of the ball on the flowmeter.

4. At the end of each test period, read the tube immediately and record the results. Repeat with other tubes until all desired contaminants have been sampled.

5. Close the regulator knob (turn counterclockwise) to shut off pressure to flowmeter. Open the flowmeter valve to bleed off pressure on the flowmeter. Disconnect and store system in case.

Warning:

Do not attempt to remove regulator while system is pressurized. Always test air quality after the filter system to assure proper function. The periodic testing of CO levels does not substitute for a CO or high temperature alarm per OSHA regulations. We recommend the installation of a CO monitor in the breathing air system to continuously monitor for CO. Call Air Systems' customer service department to discuss a retrofit for your system.

HIGH PRESSURE AIR CYLINDER TESTS PROCEDURES FOR MODELS HP-A4 AND HP-A445

Select the proper test module based on the pressure of the cylinder to be tested (HP-A4 for up to 3000psi and HP-A445 for up to 5000psi). A dual stage high pressure reducing regulator is provided to reduce bottle pressure before it is delivered to the flowmeter. The CGA-346 or 347 valve is screwed directly into the cylinder. The output pressure to the flowmeter is set between 20 -30 psi. Attach test module LP-A4 to the female coupling on the regulator and follow steps 1 through 5 above.

DETECTOR TUBE READING, AND INTERPRETATION

The following information will be helpful when reading and interpreting the detector tubes.

A. Always read tubes and record results immediately after testing. In some cases stains may fade or crawl within a few hours.

B. A tube **may not** be reused, even after a zero reading.

C. The oil mist is normally used at 500 cc/min. for two hours; however, reliable results are obtained using shorter sampling periods and correcting the reading with a multiplication factor as indicated below:

Test Duration	**Multiply Reading By**
30 minutes	4
60 minutes	2

D. If at the end of a test, it is noted that the stain has overshot the scale, the actual concentration may be determined as follows: Repeat the test with a new tube and observe the time required to reach the highest calibration mark (full scale). Multiply the full scale concentration by the ratio of recommended test time to actual test time.
Example: The H_20 tube reaches full scale (80 mg/m^3) in six minutes.
80 x 10/6 = 133 mg/m^3 (actual concentration).

E. Excessive water vapor (i.e., greater than 250 mg/m^3 $H_2$0) may cause the oil mist tube (#109-AD) to become unreliable. Run the water vapor test before running the oil mist test to determine the water vapor level. The recommended testing sequence is shown below:

First:	H_2O (water)
Second:	CO_2 (carbon dioxide)
Third:	CO (carbon monoxide)
Fourth:	Oil Mist

F. Always use the enclosed quick connect valve to flush the system before putting the filter holder in-line for analysis. Flushing or purging should continue at least 2 - 3 minutes until no visible water is discharged from the line.

G. Never exceed 20psi into the filter holder otherwise damage to the assembly may occur.

H. Always record the flow rate and run time on the petri-dish filter holder when returning the unit for weighing.

I. Never touch the filter membranes as the results could be contaminated.

SPECIAL APPLICATION FOR HIGH MOISTURE ENVIRONMENT

High moisture content, usually above 250 mg/m^3, will result in unreliable readings in the oil tube. To remove excessive moisture from the breathing air line, prior to running the moisture test tube, order Air System's prefilter assembly part FLTR020. Attach the filter to the male inlet plug located on the LP-A4 test module before performing air test. An approximate 10% correction factor should be added to the oil tube reading to achieve a more accurate reading.

TOTAL PARTICULATE/OIL MIST TEST PROCEDURE FOR MODEL LP-47PF

The module has been designed to allow for quick accurate tests of total particulates and oil mist found in breathing air. One cubic meter of air is passed over a pre-weighed filter with the resulting difference in weight equaling the total particulate and oil found in the tested breathing air.

The LP-47PF test module is plugged directly into the output air coupling after the Grade-D filter system or into the pressure reducing regulator used for bottled air testing. Maximum pressure should not exceed 20psi coming into the test module. The polycarbonate test module holds the pre-weighed filter. The other end has a male 1/4" plug attached which is plugged into the air outlet coupling of the breathing air system. After testing, the filter is weighed to check filter weight and a calculation is made in mg/m^3.

Using the steel forceps supplied in the kit, install a 47mm pre-weighed filter in the polycarbonate filter holder. With the filters installed, plug the test module into the air outlet fitting, not exceeding 20psi. Adjust the flow to 50 LPM and allow the air to flow for 20 minutes. This results in 1 cubic meter of air being passed over the filters; if a different time is used it should be noted. After 20 minutes, the air is turned off at the regulator, the filter is removed from the housing using the forceps and placed in the supplied petri dish. The tested filter sample should be sent to a laboratory for weighing on a microbalance scale.

LABORATORY SERVICES AVAILABLE

Enclosed in the kit is a data sheet to allow you to send your filter sample to Trace Analytics if you would like an independent laboratory to provide the weighing service for your filter. Trace Analytics charges $30.00 to weigh your sample and provide certified laboratory results to you. To obtain more information, contact Trace Analytics at 1-800-247-1024.

LP-47PF SPECIFICATIONS

Material Holder:	Polycarbonate
O-ring:	Ethylene propylene rubber
Max. Operating Temp/Pressure:	38 degrees C at 3.4 atm 100 degrees F at 50psi
Sterilization:	121 degrees C (250 degrees F) for 15 minutes
Holder Size:	6.0 cm OD x 6.5 cm H
Filter Diameter:	47mm
Prefilter Diameter:	42mm
Filtration Area:	11.3 cubic cm
Connections: Base and Cap	Multipurpose female Luer-slip 1/4" NPT male and 1/4" tubing

ASSEMBLY

1. Unscrew assembly ring and remove cap. Set both aside.
2. Install O-ring:
   Position base support grid on base with smooth side facing up.
   Press O-ring securely into the molded groove in the base support grid.

3. Place the second support grid into the cap, with the smooth side of the grid facing down.

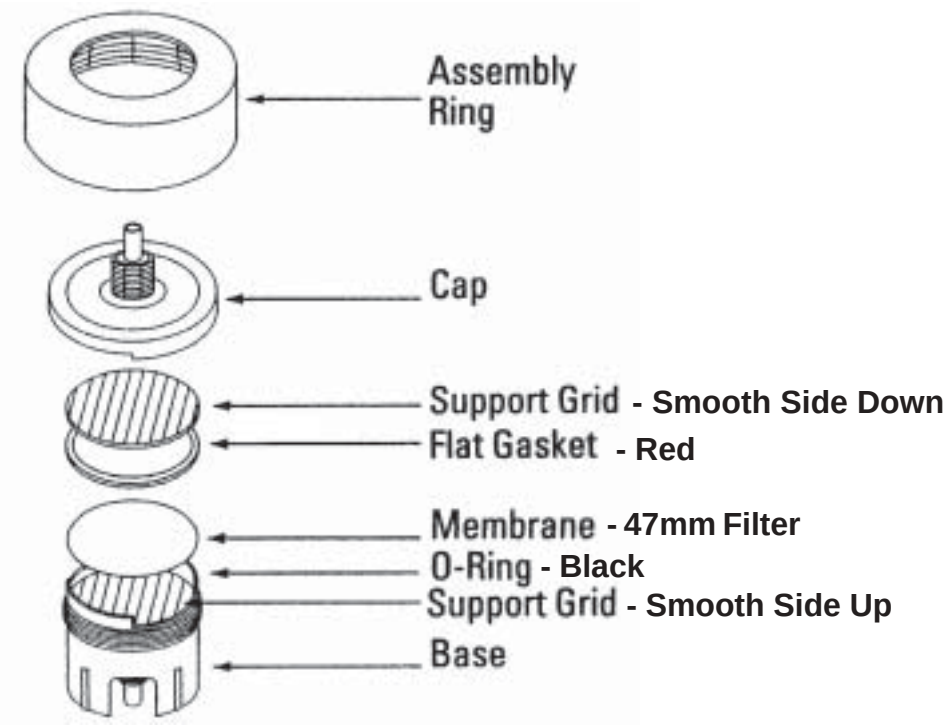

4. Place the 47mm filter into holder using forceps:

   Place the 47mm filter on the O-ring positioning it so that the O-ring is completely covered.

5. Place the flat gasket over the 47mm filter, so that it completely covers the membrane and O-ring.
6. Secure the cap to the base so that the anti-twist tabs interlock, taking care not to displace the gasket and filter.
7. Screw the assembly ring tightly onto the base.

FILTER HANDLING TIPS

1. Never handle filter with fingers. Use blunt, curve tipped forceps (wet or dry filter) or vacuum tweezers (dry membrane).

2. Filter identification can be made by marking the bottom side of the petri dish with an indelible black or blue pen.

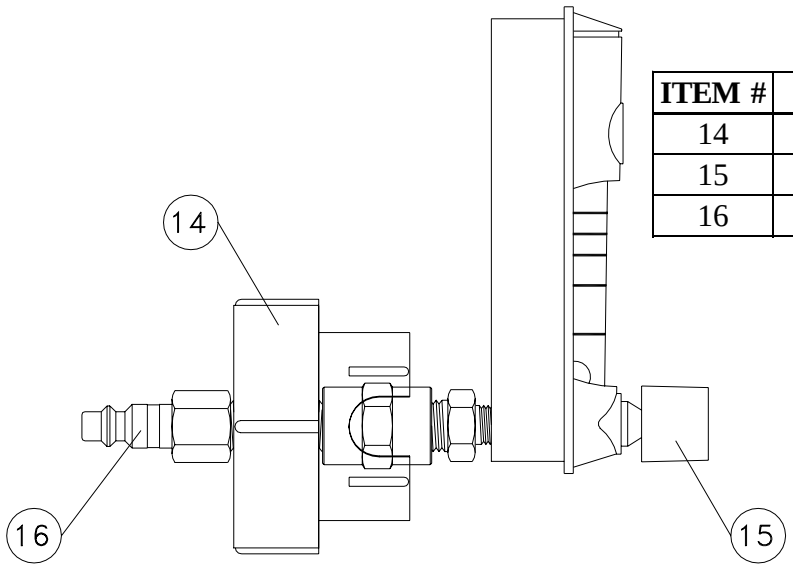

ITEM #	DESCRIPTION	PART #
14	47mm FILTER HOLDER	MWH-44
15	FLOWMETER	SAM024
16	INLET FITTING	QDH3PL4F

STERILIZATION

Holders, loaded* or unloaded with membranes, can be repeatedly autoclaved at 121 degrees C (250 degrees F) for 15 minutes at 15psi, or sterilized purging with standard sterilizing gas mixtures (not > 20% ethylene oxide.

DISASSEMBLY

1. Unscrew assembly ring. Remove cap and flat gasket.
2. Carefully unloaded membrane.
3. Remove O-ring.
4. The support grid should be removed for cleaning as needed. Insert a blunt probe through the base and push the grid out.

CLEANING

1. Dissemble holder completely.
2. Wash all parts with suitable solvent (i.e. isopropyl alcohol). **Do not use acetone.** If scrubbing is required, use a soft bristle brush.
3. Rinse in clean water. Air dry.

**Loosen assembly ring one-eighth of a turn. Retighten after autoclaving. Inlet and outlet should be covered with appropriate autoclave wrap during steam autoclaving.*

4. Store disassembled holder in plastic bag or other clean receptacle.

Note: If holder is pre-loaded and sterilized, do not store above normal room temperature for long periods.

OPERATING TIPS

1. Check to see that the assembly ring is tightened after making inlet and outlet connections.
2. **NEVER** operate holders above 3.4atm at 38 degrees C (50psi at 100 degrees F).
3. Periodically inspect seals for signs of deterioration (cracks, color changes) and replace as needed.

REPLACEMENT ITEMS AND PARTS IDENTIFICATION
MODEL LP/HP-A4K

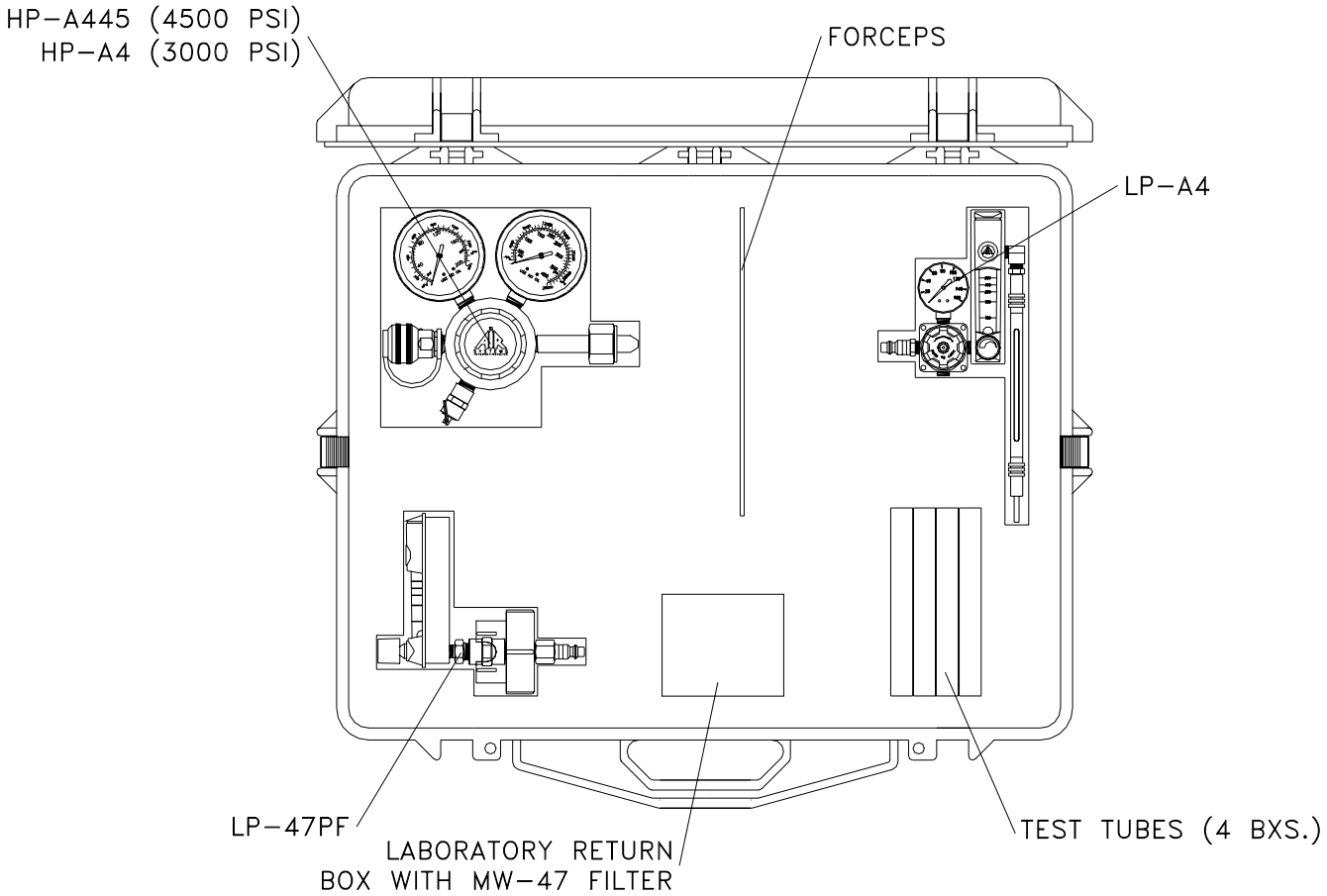

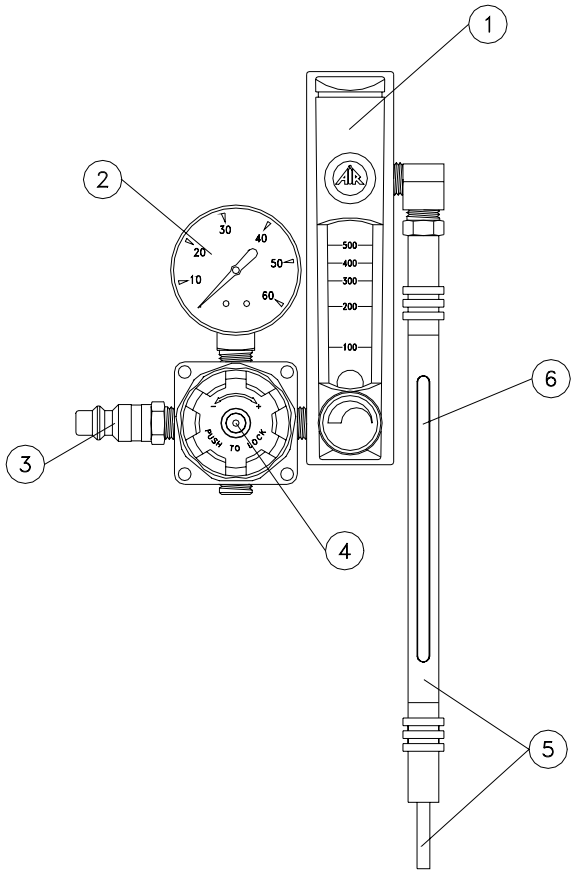

COMPONENT
MODEL LP-A4

ITEM #	DESCRIPTION	PART #
1	FLOWMETER	WL033NS
2	PRESSURE GAUGE, 0-160 PSI	GA15160S
3	INLET FITTING	QDH3PL4M
4	PRESSURE REGULATOR	WL013A
5	TEST TUBE HOLDER/BREAKER	CAL007
6	TEST TUBE	-

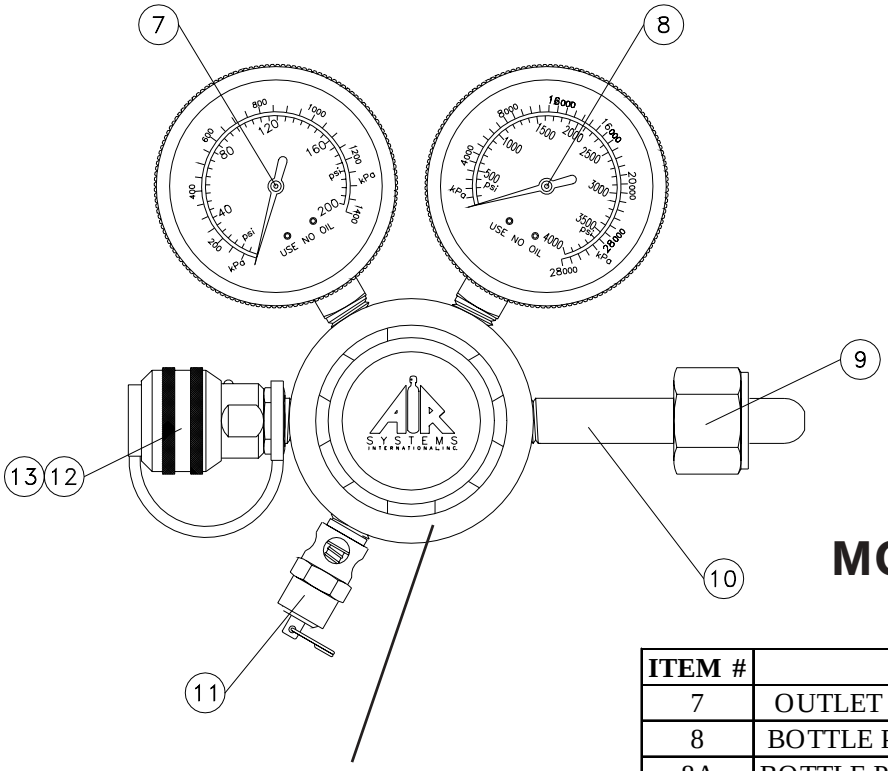

REG-3000NG - Regulator only

REG-5000NG - Regulator only

COMPONENT
MODEL HP-A4/A445

ITEM #	DESCRIPTION	PART #
7	OUTLET PRESSURE GAUGE, 0-200 PSI	GA252005RG
8	BOTTLE PRESSURE GAUGE, 0-4000 PSI	GA254KSREG
8A	BOTTLE PRESSURE GAUGE, 0-6000 PSI*	GA256KSREG
9	CGA-346 NUT	HPBR025
9A	CGA-347 NUT*	HPBR049
10	CGA-346 NIPPLE	HPBR026
10A	CGA-347 NIPPLE*	HPBR050
11	RELIEF VALVE, 125 PSI	VR4125BR
12	OUTLET FITTING, HANSEN SERIES	QDH3SL4M
13	DUST CAP	QDH3DCAP

* Items numbers denoted with“A” applied to Model HP-A445

Warranty Disclaimer

Air Systems' manufactured equipment is warranted to the original user against defects in workmanship or materials under normal use for one year after date of purchase. Any part which is determined by Air Systems to be defective in material or workmanship will be, as the exclusive remedy, repaired or replaced at Air Systems' option. This warranty does not apply to electrical systems or electronic components. Electrical parts are warranted, to the original user, for 90 days from the date of sale. During the warranty period, electrical components will be repaired or replaced at Air Systems' option.

NO OTHER WARRANTY, EXPRESSED OR IMPLIED, AS TO DESCRIPTION, QUALITY, MERCHANTABILITY, FITNESS FOR A PARTICULAR PURPOSE, OR ANY OTHER MATTER IS GIVEN BY AIR SYSTEMS IN CONNECTION HEREWITH. UNDER NO CIRCUMSTANCES SHALL THE SELLER BE LIABLE FOR LOSS OF PROFITS, ANY OTHER DIRECT OR INDIRECT COSTS, EXPENSES, LOSSES OR DAMAGES ARISING OUT OF DEFECTS IN, OR FAILURE OF THE PRODUCT OR ANY PART THEREOF.

The purchaser shall be solely responsible for compliance with all applicable Federal, State and Local OSHA and/or MSHA requirements. Although Air Systems International believes that its products, if operated and maintained as shipped from the factory and in accordance with our "operations manual", conform to OSHA and/or MSHA requirements, there are no implied or expressed warranties of such compliance extending beyond the limited warranty described herein. Product designs and specifications are subject to change without notice. **Rev 2 12/98**

Air leaks are not covered under warranty except when they result from a defective system component, i.e. an on/off valve or regulator or upon initial delivery due to poor workmanship. Air leaks due to poor delivery or damage will be covered under delivery claims. Minor air leaks are part of routine service and maintenance and are the responsibility of the customer just as are filters and oil changes.